iMOTION™ IMM101T/IMM102T - Smart IPM for motor control

Fully integrated high-performance turnkey motor control system

Quality requirement category: Industry

IMM101T/IMM102T series is a family of fully-integrated, turnkey high-voltage Motor Drive Module designed for high-performance, high-efficiency PMSM/BLDC motor drive applications such as fans, pumps and compressors. It integrates Infineon's Advanced Motion Control Engine (MCE), gate driver and six power MOSFETs in a single 12x12mm package.

Feature list

- Motion control engine (MCE) as ready-to-use controller solution for variable speed drives
- Field oriented control (FOC) for permanent magnet synchronous motor (PMSM)
- Space vector PWM with sinusoidal commutation and integrated protection features
- Current sensing via single or leg shunt through direct interface
- Sensorless operation
- Integrated analog comparators for over-current protection
- Built-in temperature sensor
- 3.3V or 5.0V supply voltage options for controller
- 15V supply voltage for gate driver
- 3 different power MOSFET options: 6Ω/500V, 1.4Ω/650V and 0.95Ω/650V
- Integrated bootstrap FET
- Support for hall sensors
- Boost PFC control (IMM102T only)
- Flexible host interface options for speed commands: UART, PWM or analog signal
- Support for IEC 60335 ('Class B')
- Isolation $1500V_{RMS}$ 1min
- Very compact 12x12mm PQFN package

Applications

- Fans
- Pumps
- Compressors

IMM100 series description

IMM101T/IMM102T devices belong to IMM100 series of iMOTION™ Smart IPMs. IMM100 series is a family of fully-integrated, programmable or configurable (“turnkey”) high-voltage Motor Drive Modules designed for high-performance, high-efficiency PMSM (BLDC) motor drive applications such as fans, pumps and compressors. It integrates a controller, a gate driver and six power MOSFETs. IMM100 series is available in two variants: “A”-variant and “T”-variant. “A”-variant (IMM100A-xxx) includes a fully programmable ARM® Cortex®-M0 controller, while “T”-variant (IMM10xT-xxx) features the Infineon’s patented Motion Control Engine (MCE).

Both variants offer different control configuration options for PMSM motor-drive system in a compact 12x12mm surface-mount package which minimizes external components count and PCB area. This thermally enhanced package provides excellent thermal performance working with or without heatsink. The package features a 1.3mm creepage distance between the high-voltage pads beneath the package to ease the surface mounting with standard SMT process and increase the robustness of the system.

IMM100 series integrates either 500V FredFET or 650V CoolMOS and the industry benchmark 3-phase high-voltage, rugged gate driver with integrated bootstrap functionality. Depending on the power MOSFETs employed in the package, IMM100 series covers applications with a rated output power from 25W to 80W with 500V/600V maximum DC voltage. In the 600V versions, the Power MOS technology is rated 650V, while the gate driver is rated 600V, which determines the maximum allowable DC voltage of the system.

Ordering information

IMM100T devices integrate an MCE for the control of variable speed drives. By integrating both the required hardware and software to perform control of a permanent magnet synchronous motor (PMSM) they provide the shortest time to market for any motor system at the lowest system and development cost.

Product type	Application	Output Rating	$R_{DS(ON)}$ Typ
IMM101T-015M	Single Motor Control	500V / 1A	4.8 Ω
IMM101T-046M	Single Motor Control	600V / 4A	1.26 Ω
IMM101T-056M	Single Motor Control	600V / 4A (optimized for low-frequency operation)	0.86 Ω
IMM102T-015M	Single Motor Control + Boost PFC	500V / 1A	4.8 Ω
IMM102T-046M	Single Motor Control + Boost PFC	600V / 4A	1.26 Ω
IMM102T-056M	Single Motor Control + Boost PFC	600V / 4A (optimized for low-frequency operation)	0.86 Ω

Table of Contents

iMOTION™ IMM101T/IMM102T - Smart IPM for motor control 1
Feature list 1
Applications 1
IMM100 series description 2
Ordering information 2
Table of Contents 3
1 Overview 5
1.1 IMM100T – Motion Control Engine 5
1.2 Gate Driver 5
1.3 Switches 5
1.4 Application Diagrams 6
1.5 IMM100T Application Use Cases 7
1.5.1 Sensorless Single-Shunt 7
1.5.2 Sensorless Leg Shunts 8
1.5.3 Sensored with 2 Hall Sensors 9
1.5.4 Sensorless single-shunt with boost PFC 10
2 Pinout – IMM100T series 11
3 Gate Driver Function 13
3.1 Features and Protections 13
3.1.1 Integrated Bootstrap Functionality 13
3.1.2 Undervoltage Lockout Protection 14
3.2 Block Diagram 15
4 DC Characteristics 16
4.1 Absolute Maximum Ratings 16
4.2 Recommended Operating Conditions 17
4.3 Static Electrical Characteristic 17
4.4 Dynamic Electric Characterisitic 18
4.5 MOSFET Avalanche Characteristics 19
4.6 Thermal Characteristics 19
4.7 Thermal Characterization 20
4.8 Power Consumption IMM100T series 23
4.9 Flash Memory Parameters 24
4.10 Digital I/O DC Characteristics 24
4.11 Analog I/O DC Characteristics 25
4.12 Under Voltage Lockout DC characteristics 25
4.13 Analog to Digital Converter – IMM100T series 26
4.14 Temperature Sensor Characteristic 26
5 AC Characteristics 27
5.1 Internal Oscillator AC Characteristics 27
5.2 Power-Up and Supply Threshold Characteristics 27
5.3 Motor Control Parameters – IMM100T series 27
5.3.1 PWM Characteristics – IMM100T series 28
5.3.2 Fault timing – IMM100T series 28
5.4 Power Factor Correction (PFC) parameters – IMM102T 28

Table of Contents

5.4.1 Boost PFC characteristics – IMM102T 28
5.5 Communication interface parameters – IMM100T series 28
5.5.1 UART interface - IMM100T series 28
6 I/O Structure 30
7 Package Outline 31
8 Part Marking Information 33
9 Quality Declaration 34
Revision history 34

1 Overview

IMM100T modules contain a processor core that can address the real-time control needs of motor control. It can use low-cost single shunt or leg shunts as motor current feedback by a combination of on-chip hardware and firmware. Complex FOC control algorithms either sensorless or with sensors, as well as system level control can be easily implemented inside IC and meet fan, pump and compressor applications requirements.
A standby mode helps to decrease system power consumption when the motor is stopped. The high-voltage level shifting function with boot strap diode function is integrated into the gate driver IC. The device also contains the six low-loss 500V power FET or 650V CoolMOS which form the three phase inverter circuit.

1.1 IMM100T – Motion Control Engine

iMOTION™ IMM100T is the latest generation inverter including controller designed as a single package solution for inverterized motor control applications with or without power factor correction. The IMM100T series provides a built-in closed loop sensorless (or optionally sensor based) control algorithm using the unique flexible Motion Control Engine (MCE) for permanent magnet motors. Infineon's patented and field proven MCE implements field oriented control (FOC) using single or leg shunt current feedback and uses space vector PWM with sinusoidal signals to achieve highest energy efficiency. In addition to the motor control algorithm it also integrates multiple protection features like over- and under-voltage, over current, rotor lock etc. The IMM100T series takes advantage of a new hardware platform combining an ARM® Cortex® core with an innovative set of analog and motor control peripherals. The high-level of integration in terms of hardware and software results in a minimum number of external components required for the implementation of the inverter control.
The next generation of the MCE not only further improves the performance of the control algorithm but also adds functionality like sensor support for accurate rotor positioning, ready-to-use PFC algorithm as well as more and flexible and faster host interface options.
The IMM100T series is offered in several device variants ranging from single motor control to motor control plus PFC. All devices can be used in applications requiring functional safety according to IEC 60335 ('Class B').
This data sheet provides all electrical, mechanical, thermal and quality parameters. A more detailed description of the features and functionality can be found in the respective reference manual of the MCE software.
There are multiple versions of the MCE software offered from Infineon and made available via download from the Infineon web site. By using a special secure boot algorithm it is assured that the MCE software versions can only be installed onto the matching hardware derivative, i.e. IMM100T variants for which the software has been tested and released. Infineon provides the tools to program these software images.

1.2 Gate Driver

The gate driver is designed to work with MCE within an integrated power module. It has integrated boot strap bootFET structure, only external bootstrap capacitors are needed outside the module. The gate driver includes an under voltage protection and a fault reporting system. The gate driver is based on 600V High-Voltage Junction Isolation technology.

1.3 Switches

The IMM100T modules are available in three different power stage options

- 6 Ohm 500V Trench MOSFETs in versions IMM101T-015 and IMM102T-015
- 1.4 Ohm 650V CoolMOS™ in versions IMM101T-046 and IMM102T-046 (600V maximum voltage is defined by gate driver technology)

- 0.95 Ohm 650V CoolMOS™ in versions IMM101T-056 and IMM102T-056 (600V maximum voltage is defined by gate driver technology)

1.4 Application Diagrams

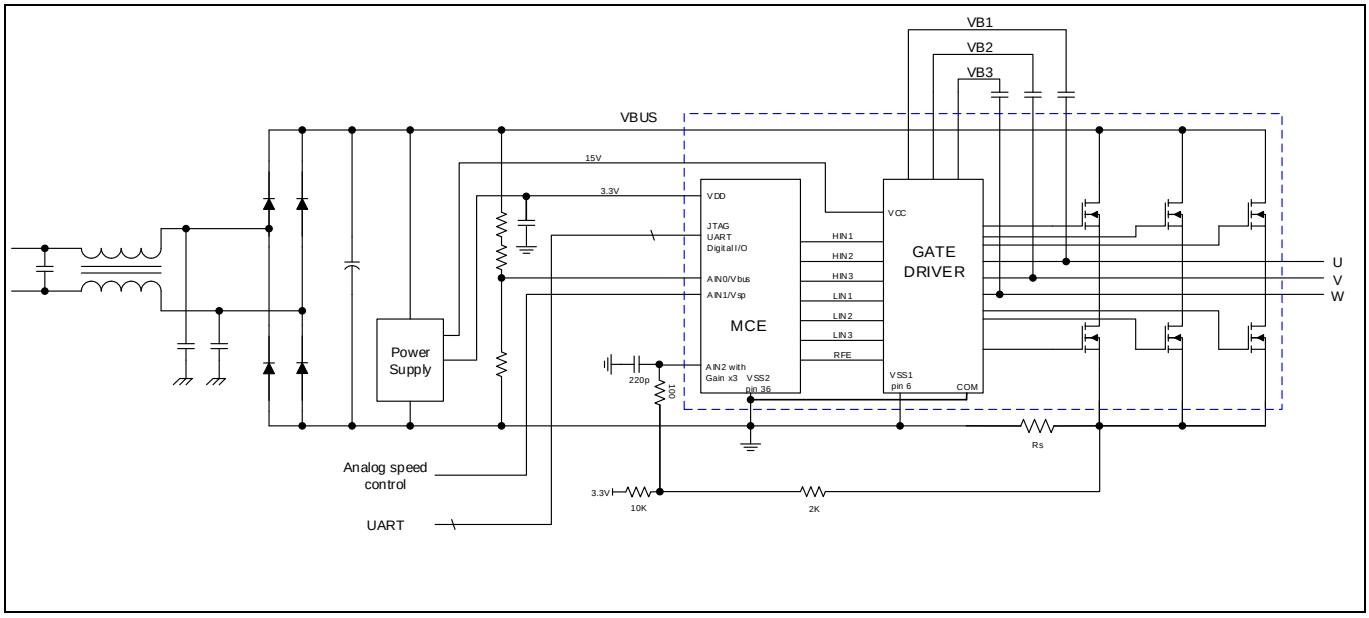

Figure 1 Application Block Diagram using IMM101T – Single Shunt Configuration

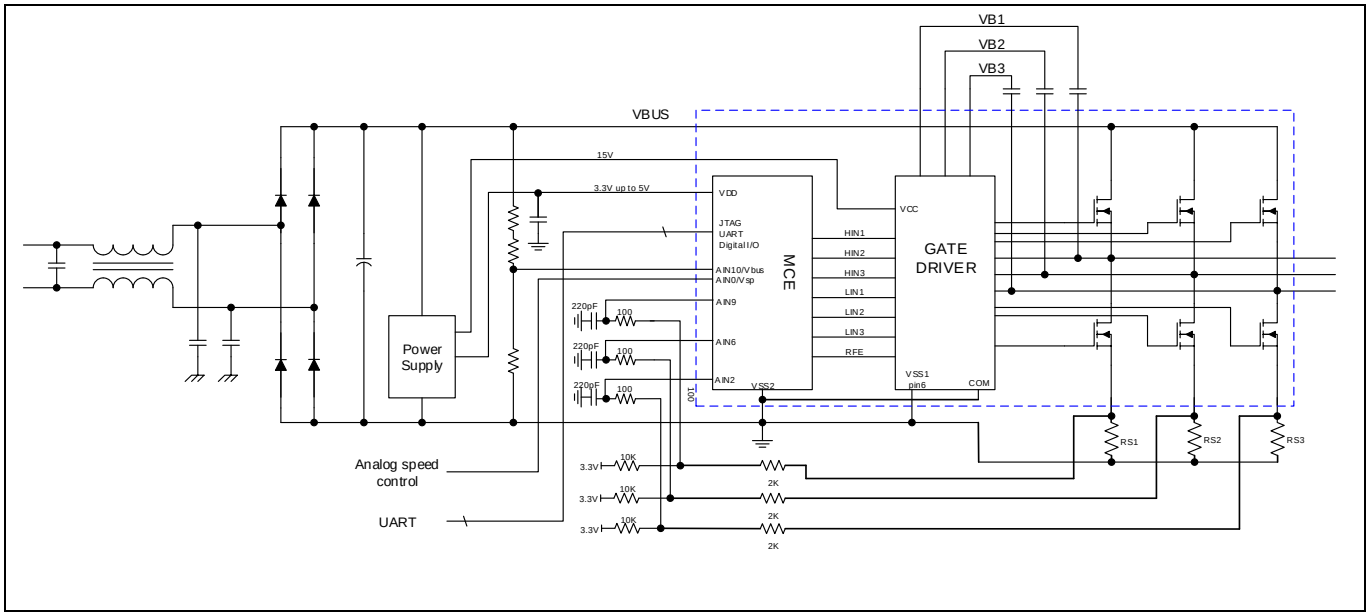

Figure 2 Application Block Diagram using IMM101T – Leg Shunts Configuration

1.5 IMM100T Application Use Cases

This chapter provides more details about most common application use cases for IMM100 series' devices, including necessary passive components and pin connections. For full information about each pin functionality, refer to Table1.

1.5.1 Sensorless Single-Shunt

The sensorless single-shunt use case shown below is a most common application use case for IMM100 devices, alowing lowest BOM cost and highest number of available programmable pins for system-level functions.

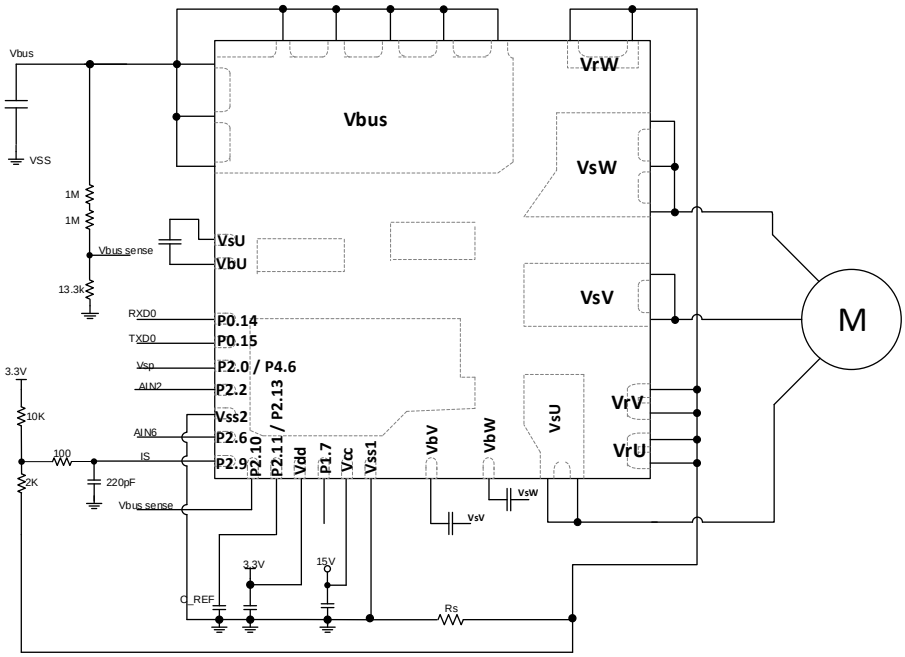

Options for Input Set Point:
1- Analog Input Vsp to pin34 P2.0
2- UART input through P0.14 and P0.15
3- Duty (PWM) or frequency input on pin34 P4.6

Other Pins available to the user:
P2.6, P2.2, P1.7

Figure 3 IMM101T Sensorless, single shunt configuration

1.5.2 Sensorless Leg Shunts

The sensorless leg shunts configuration may be used in applications where only very low acoustic noise is requrired.

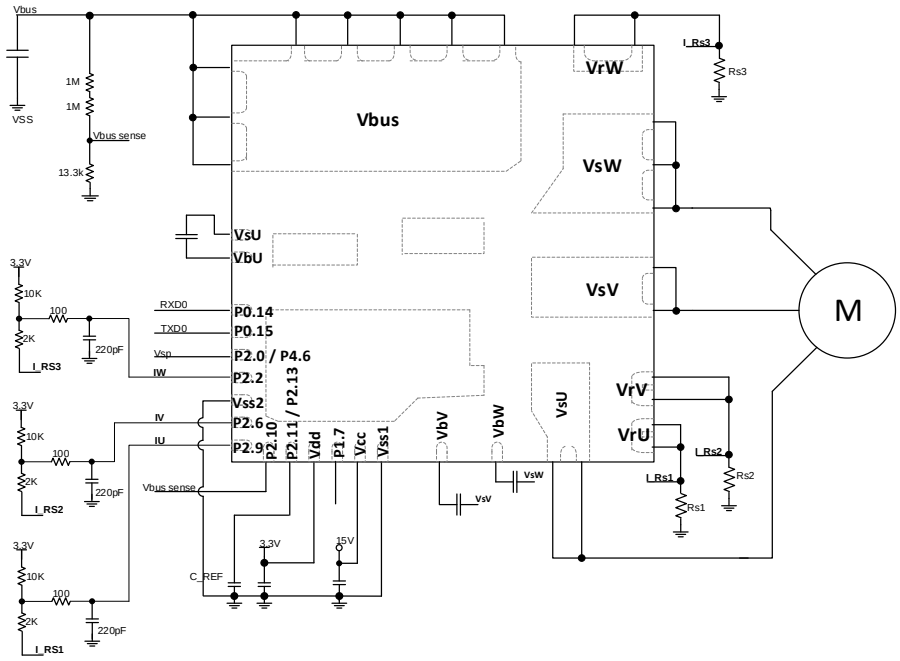

Options for Input Set Point:
1- Analog Input Vsp to pin34 P2.0
2- UART input through P0.14 and P0.15
3- Duty (PWM) or frequency input on pin34 P4.6

Other Pins available to the user:
P1.7
If only two shunts are used, P2.2 is available

Figure 4 IMM101T Sensorless, three leg shunts configuration

1.5.3 Configuration with 2 Hall Sensors

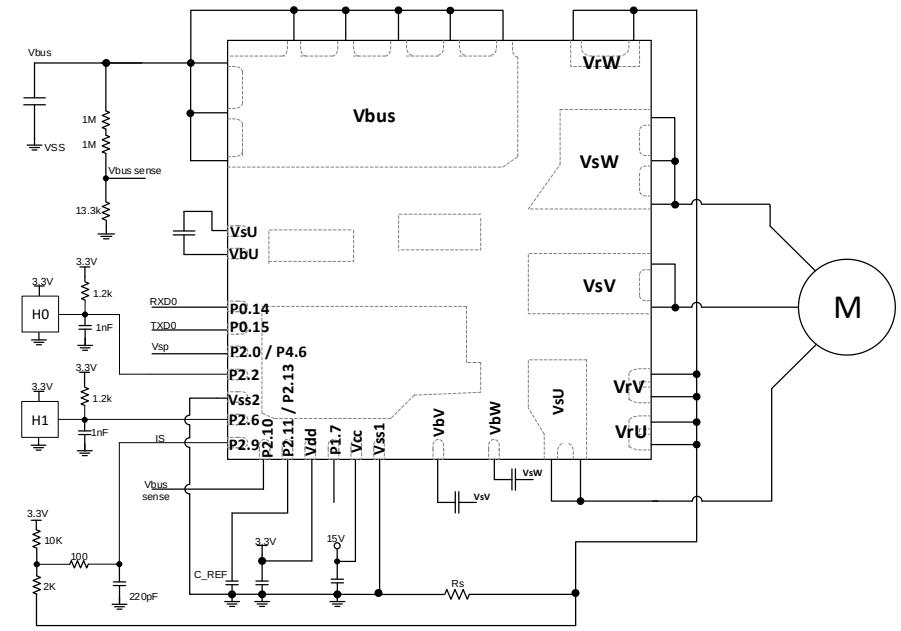

Options for Input Set Point:
1- Analog Input Vsp to pin34 P2.0
2- UART input through P0.14 and P0.15
3- Duty (PWM) or frequency input on pin 34 P4.6

Other Pins available to the user:
P1.7
If DcBus is not measured, P2.10 is available

Figure 5 IMM101T Two Hall sensors, single shunt configuration

1.5.4 Sensorless single-shunt with boost PFC

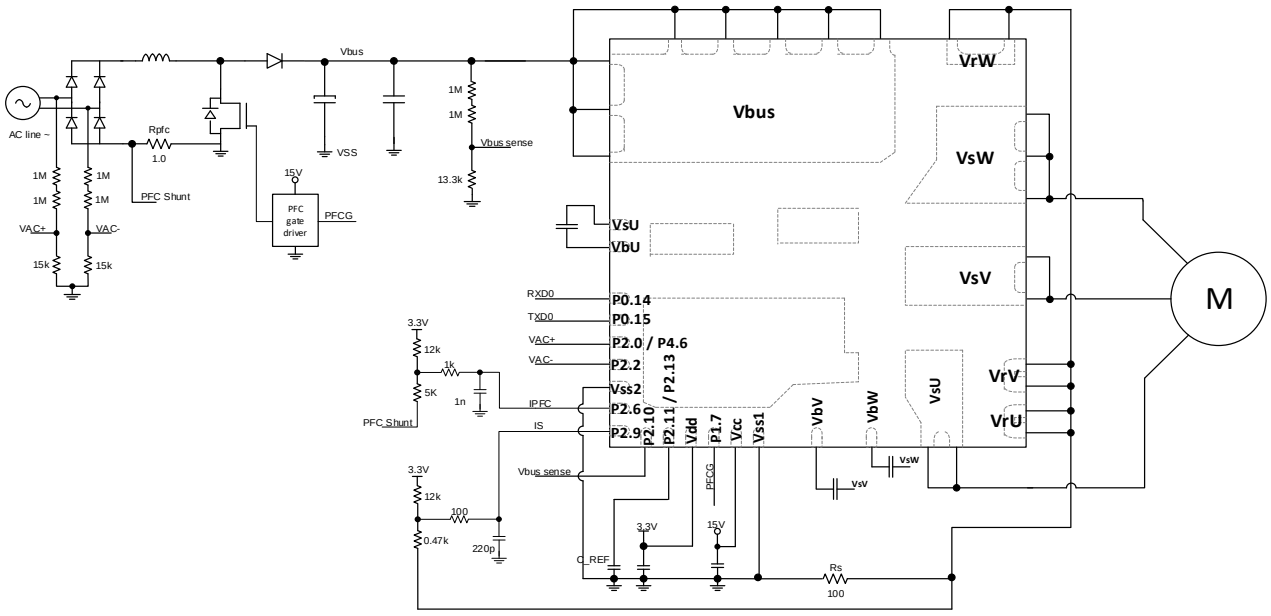

Options for Input Set Point:
UART input through P0.14 and P0.15

Figure 6 IMM102T Sensorless Single shunt with Boost PFC function

2 Pinout – IMM100T series

Table 1 Pinout description IMM101T series – single motor control – typical configuration

Pin	Name	Type	Description
1	Vbus scaled	I	Vbus scaled ADC input
2	CREF	I/O	Analog Overcurrent Comparator threshold DAC
3	V_{DD}	P	Digital V_{DD} input [3.3V – 5.0V]
4	P1.7	I/O	Digital Input --- Analog and Digital Output
5	Vcc	P	15V gate driver power supply input
6	$V_{SS}1$	P	Gate Driver Power ground, connect externally via PCB to pin 36
7	VbV	P	V phase bootstrap capacitor positive
8	VbW	P	W phase bootstrap capacitor positive
9,10	VsU	P	U phase output
11,12	VrU	P	Leg U return – Low-Side MOS source
13,14	VrV	P	Leg V return – Low-Side MOS source
15,16, 40	VsV	P	V phase output and V phase bootstrap capacitor negative
17,18,19	VsW	P	W phase output and W phase bootstrap capacitor negative
20,21	VrW	P	Leg W return – Low-Side MOS source
22~29	Vbus	P	DC bus voltage
30, 39	VsU	P	U phase bootstrap capacitor negative
31	VbU	P	U phase bootstrap capacitor positive
32	RX0	I	Serial Port Receive input
33	TX0	O	Serial Port transmit output
34	Vsp/AIN 0	I	Analog Voltage Set Point Input
35	IW (or H0)/AIN 2	I	Analog Current sense input phase W or Hall0 input
36,41	$V_{SS}2$	P	Signal ground --- Connect externally via PCB to pin 6
37	IV (or H1)/AIN 6	I	Analog Current sense input phase V or Hall1 input
38	ISS or IU	I	Analog Current sense input phase U or single Shunt

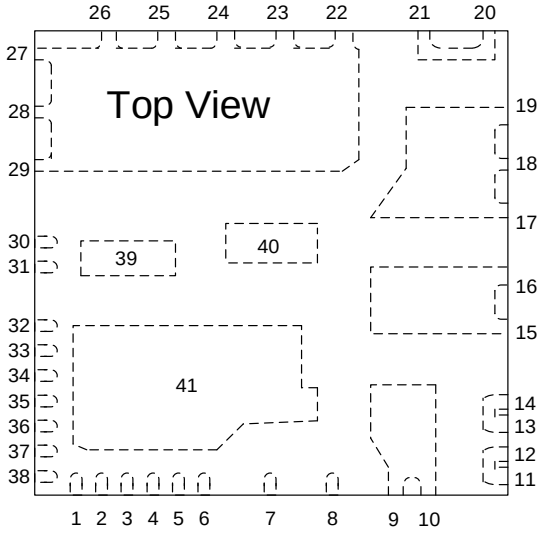

Note
Pins 39 and 40 are not required to be connected electrically on the PCB but are recommended to be soldered for mechanical stability.

Figure 7 IMM100T series pinout

Table 2 Pinout description IMM102T series – single motor + PFC – typical configuration

Pin	Name	Type	Description
1	Vbus scaled	I	Vbus scaled ADC input
2	CREF	I/O	Analog Overcurrent Comparator t hreshold DAC
3	V_{DD}	P	Digital V_{DD} input [3.3V – 5.0V]
4	PFCG	O	PWM Output to PFC gate driver
5	Vcc	P	15V gate driver power supply input
6	$V_{SS}1$	P	Gate Driver Power ground, connect externally via PCB to pin 36
7	VbV	P	V phase bootstrap capacitor positive
8	VbW	P	W phase bootstrap capacitor positive
9,10	VsU	P	U phase output
11,12	VrU	P	Leg U return – Low-Side MOS source
13,14	VrV	P	Leg V return – Low-Side MOS source
15,16, 40	VsV	P	V phase output and V phase bootstrap capacitor negative
17,18,19	VsW	P	W phase output and W phase bootstrap capacitor negative
20,21	VrW	P	Leg W return – Low-Side MOS source
22~29	Vbus	P	DC bus voltage
30, 39	VsU	P	U phase bootstrap capacitor negative
31	VbU	P	U phase bootstrap capacitor positive
32	RX0	I	Serial Port Receive input
33	TX0	O	Serial Port transmit output
34	Vac+	I	Vac input ac+ voltage sensing through resistor external divider
35	Vac-	I	Vac input ac- voltage sensing through resistor external divider
36,41	$V_{SS}2$	P	Signal ground --- Connect externally via PCB to pin 6
37	IPFC	I	Analog Current sense input PFC
38	ISS	I	Analog Current sense input single Shunt

Note: IMM101T and IMM102T share same package footprint.

3 Gate Driver Function

3.1 Features and Protections

The 3-phase high-voltage gate driver function is integrated in IMM100 series product. The driver output impedance is designed to meet an optimal dv/dt for EMI and switching loss trade offs. It is designed for 5-6 V/nsec at a rated current condition. The driver employs the anti-shoot-through protection, the integrated bootstrap function for high-side floating supplies, the low standby power and the undervoltage lockout protection function for VCC and high-side VBS supplies. The under voltage lockout for Vcc is reported as latched fault at pin RFE. The ITRIP comparator between COM and V_{SS} pin is disabled in IMM100. The gate driver block diagram is shown in Figure 10.

3.1.1 Integrated Bootstrap Functionality

The IMM100 series embeds an integrated bootstrap FET (BootFet) that allows an alternative drive of the bootstrap supply for a wide range of applications. Each bootstrap FET is connected between the respective floating supply VB (e.g. VBU, VBV and VBW, see page 15) and V_{CC}:

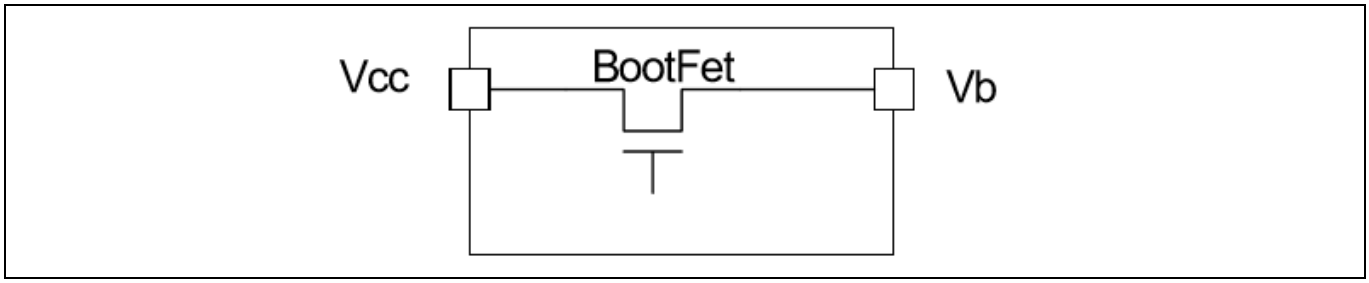

Figure 8 Simplified BootFET connection

The bootstrap FET is suitable for most PWM modulation schemes, including trapezoidal control, and can be used either in parallel with the external bootstrap network (diode+ resistor) or as a replacement of it. The use of the integrated bootstrap FET as a replacement of the external bootstrap network may have some limitations at a very high PWM duty cycle due to the bootstrap FET equivalent resistance (R_{BS}, see page 17).

The integrated bootstrap FET is turned on during the time when LO is 'high' (e.g. LOU, LOV, LOW, see page 15), and it has a limited source current due to R_{BS}. The V_{BS} voltage will be charged each cycle depending on the on-time of LO and the value of the C_{BS} capacitor, the drain-source drop of the MOSFET, and the low-side free-wheeling diode drop.

The bootstrap FET follows the state of low-side output stage, the bootstrap FET is ON when LO is high, unless the V_B voltage is higher than approximately V_{CC}. In that case, the bootstrap FET is designed to remain off until V_B returns below that threshold; this concept is illustrated in Figure 9.

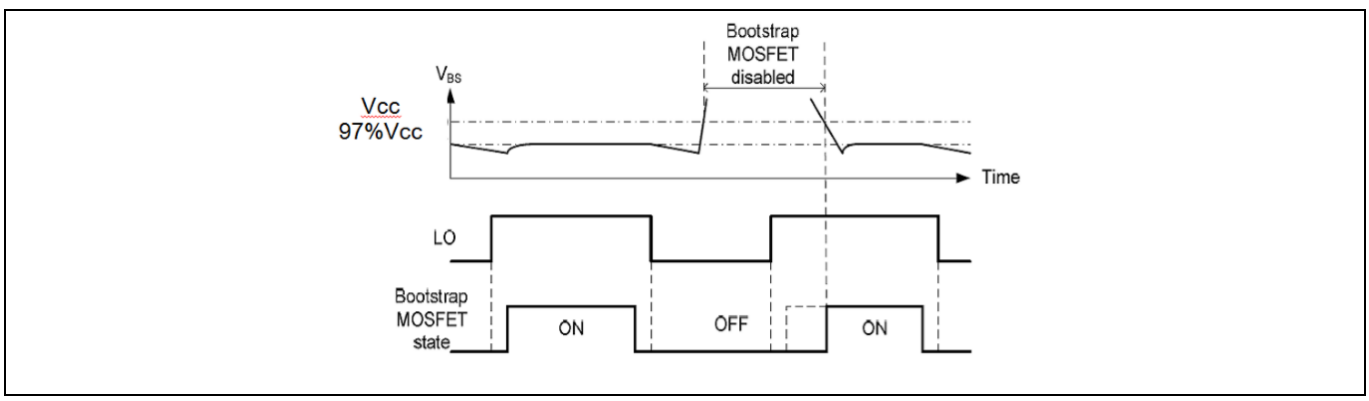

Figure 9 Bootstrap FET timing diagram

3.1.2 Undervoltage Lockout Protection

This IC provides under-voltage lockout protection on both the V_{CC} (logic and low-side circuitry) power supply and the V_{BS} (highside circuitry) power supply. Figure 10 is used to illustrate this concept; V_{CC} (or V_{BS}) is plotted over time and as the waveform crosses the UVLO threshold ($V_{CCUV+/-}$ or $V_{BSUV+/-}$) the under-voltage protection is enabled or disabled.

Upon power-up, should the V_{CC} voltage fail to reach the V_{CCUV+} threshold, the IC will not turn-on. Additionally, if the V_{CC} voltage decreases below the V_{CCUV-} threshold during operation, the under-voltage lockout circuitry will recognize a fault condition and shutdown the high and low-side gate drive outputs.

Upon power-up, should the V_{BS} voltage fail to reach the V_{BSUV+} threshold, the IC will not turn-on. Additionally, if the V_{BS} voltage decreases below the V_{BSUV-} threshold during operation, the under-voltage lockout circuitry will recognize a fault condition, and shutdown the high-side gate drive outputs of the IC.

The UVLO protection ensures that the IC drives the external power devices only when the gate supply voltage is sufficient to fully enhance the power devices. Without this feature, the gates of the external power switch could be driven with a low voltage, resulting in the power switch conducting current while the channel impedance is high; this could result in very high conduction losses within the power device and could lead to power device failure. ($V_{CCUV+/-}$ and $V_{BSUV+/-}$, see page 25)

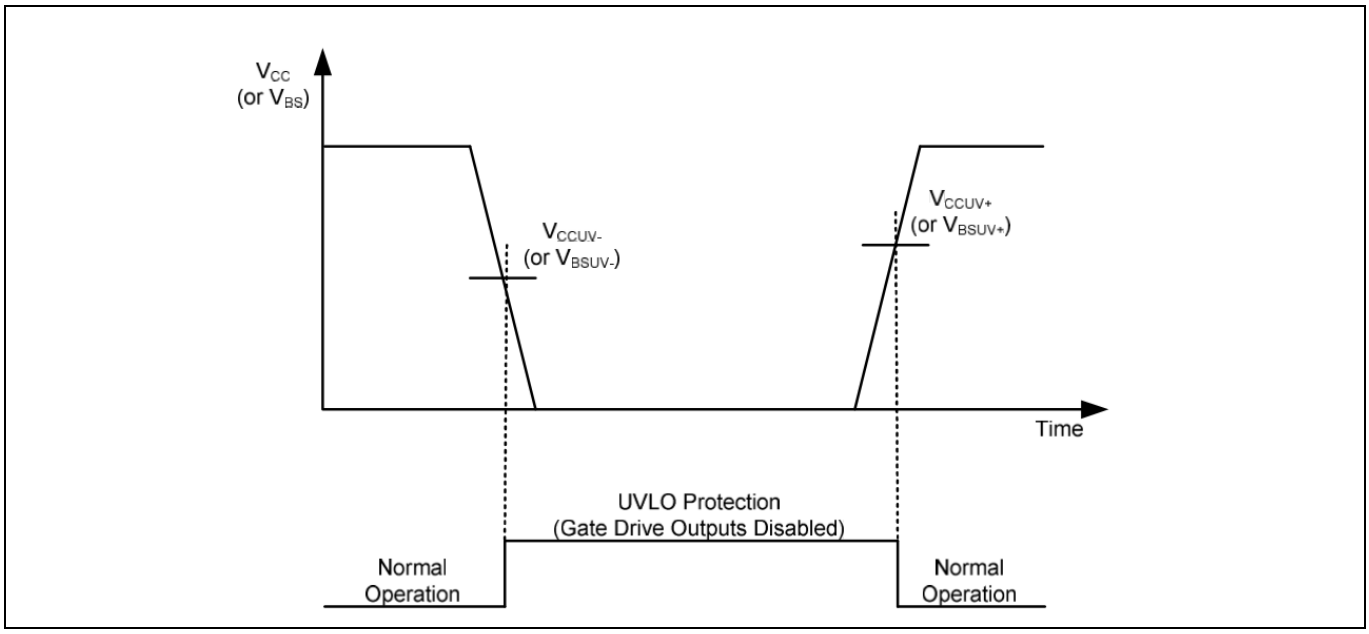

Figure 10 UVLO protection

3.2 Block Diagram

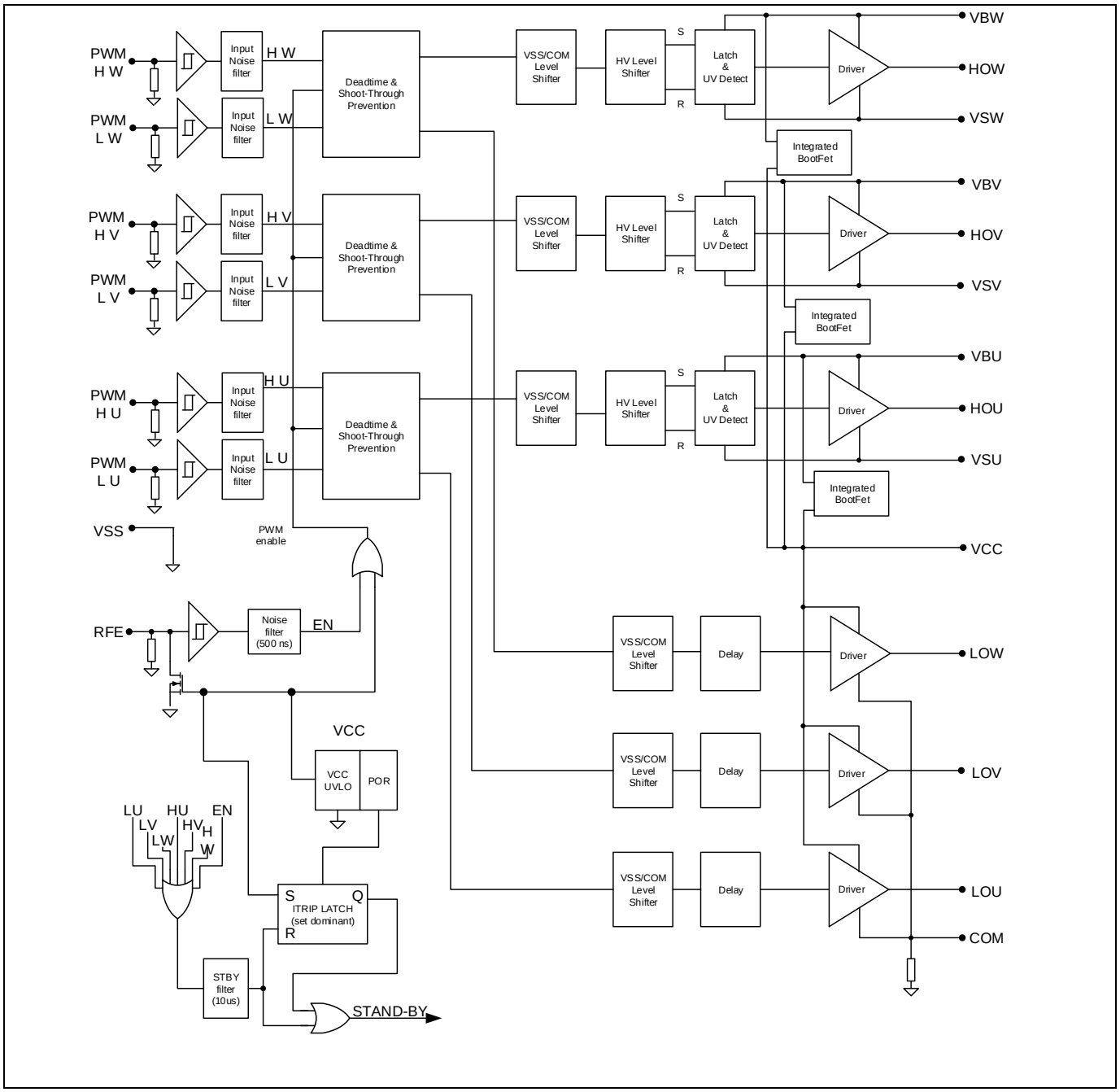

Figure 11 Block diagram of gate driver function

4 DC Characteristics

4.1 Absolute Maximum Ratings

Absolute maximum ratings indicate sustained limits beyond which damage to the module may occur. These are not tested at manufacturing. All voltage parameters are absolute voltages referenced to V_{SS} unless otherwise stated in Table 2.

Table 2 Absolute Maximum Rating

Symbol	Description		Min	Max	Unit
BV_{DSS}	MOSFET Blocking Voltage	-015M	---	500	V
		-046M and -056M	---	650	V
I_O @T_C=25°C	DC Output Current per MOSFET	-015M	---	1	A
		-046M and -056M	---	4	A
I_{OP}	Pulsed Output Current [1]	-015M	---	6	A
		-046M	---	8.2	A
		-056M	---	11	A
P_D @T_C=25°C	Maximum Power Dissipation per MOSFET [2]	-015M	---	11	W
		-046M	---	28.4	W
		-056M	---	36.7	W
$V_{S\,U,V,W}$	Gate Driver High-Side Floating Supply Offset Voltage		$V_{B\,U,V,W}$-20	$V_{B\,U,V,W}$+0.3	V
$V_{B\,U,V,W}$	Gate Driver High-Side Floating Rated Voltage - 015		-0.3	600	V
	Gate Driver High-Side Floating Rated Voltage - 046 --- 056		-0.3	600	V
V_{CC}	Gate Driver Low-Side Supply Voltage		-0.3	20	V
BV_{MODULE}	Power Module Max Voltage -015M		---	500	V
	Power Module Max Voltage -046M -056M		---	600	V
V_{DD}	Digital IC Supply Voltage		-0.3	6	V
V_{ID}	Digital and Analog Pin Voltage		-0.3	V_{DD}+0.3	V
T_J	Operating Junction Temperature - defined by Controller technology		-40	115	°C
T_L	Lead Temperature (Soldering, 30 seconds)		---	260	°C
T_S	Storage Temperature		-40	125	°C
V_{ISO}	Isolation Voltage (1min)		---	1500	V_{RMS}
I_{IN}	Input current on any controller pin during overload condition		-10	10	mA
ΣI_{IN}	Absolute sum of all controller input currents during overload condition		-50	50	mA

[1] Pulse Width=100µs, T_C=25°C, Duty=1%.

[2] Single MOSFET in TO220 package at Tcase = 25°C

Note: Characterized, not tested at manufacturing.

4.2 Recommended Operating Conditions

All voltage parameters are referenced to V_{SS}.

Table 3 Recommended Operating Conditions

Symbol	Description	Min	Typ	Max	Unit
V_{DCP}	Positive DC Bus Input Voltage - 015	---	380	400	V
	Positive DC Bus Input Voltage – 046 -- 056	---	400	480	V
$V_{B\,U,V,W}$	Gate Driver High-Side Floating Supply Voltage	V_S+12	---	V_S+18	V
V_{CC}	Gate Driver Low-Side Supply Voltage	13.5	15.0	16.5	V
V_{DD}	Digital IC Supply Voltage (3.3 V +/- 10%)	2.97	3.3	3.63	V
V_{DD}	Digital IC Supply Voltage (5.0V +/- 10%)	4.5	5.0	5.5	V
MCLK	Master clock frequency	---	48.0	---	MHz
PCLK	Peripheral clock frequency	---	96.0	---	MHz
I_{OV}	Input current on any port pin during overload condition	-5	---	5	mA
I_{OVS}	Absolute sum of all input circuit currents during overload condition	---	---	25	mA

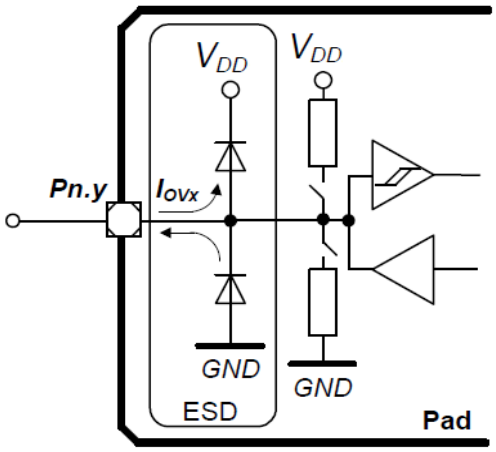

Figure 12 Input Overload Current via ESD structures

4.3 Static Electrical Characteristic

V_{cc}=15 V, T_A=25°C unless otherwise specified.

Table 4 Static Electrical Characteristic

Symbol	Description		Min	Typ	Max	Units
I_{LKH} @T_J=25°C, V_{DS}=500/650V	Leakage Current of High-Side FETs in Parallel	-015M	---	1	---	µA
		-046M	---	1	---	
		-056M	---	1	---	
I_{LKL} @T_J=25°C, V_{DS}=500/650V	Leakage Current of Low-Side FETs with	-015M	---	4	---	µA
		-046M	---	4	---	
		-056M	---	4	---	

DC Characteristics

Symbol	Description		Min	Typ	Max	Units
	Gate Drive IC in Parallel					
$R_{DS(ON)}$ @T_J=25°C, V_{GS}=10V, I_D=1.5A	Drain to Source ON Resistance	-015M	---	4.8	6	Ω
		-046M	---	1.26	1.4	
		-056M	---	0.855	0.95	
I_{DSS} @T_J=25°C, V_{DS}=500/650 V, V_{GS}=0 V	Zero Gate Voltage Drain Current	-015M	---	---	1	µA
		-046M	---	---	1	
		-056M	---	---	1	
V_{SD} @T_J=25 °C, V_{GS}=0 V, I_F=0.5 A (-015M), I_F=1.5 A (-046M), I_F=2.2 A (-056M)	MOSFET Diode Forward Voltage Drop	-015M	---	0.8	---	V
		-046M	---	0.9	---	
		-056M	---	0.9	---	
R_{BS}	Bootstrap FET Resistance	-015M	---	200	---	Ω
		-046M	---	200	---	
		-056M	---	200	---	

Note: All values obtained during characterization, not tested at munfacturing.

4.4 Dynamic Electric Characterisitic

V_{CC}=15 V, T_A=25°C, all voltage parameters are referenced to V_{SS} unless otherwise specified.

Table 5 Dynamic Electric Characteristic

Symbol	Description		Min	Typ	Max	Units
E_{ON} @T_J=25 °C, V^+=300 V, I_D=0.5 A	Switching Energy, Turn On Condition	-015M	---	27.2	---	µJ
		-046M	---	36.6	---	
		-056M	---	44.4	---	
E_{OFF} @T_J=25 °C, V^+=300 V, I_D=0.5 A	Switching Energy, Turn Off Condition	-015M	---	2.00	---	µJ
		-046M	---	1.97	---	
		-056M	---	2.53	---	
E_{REC} @T_J=25 °C, V^+=300 V, I_D=0.5 A	Switching Energy, Diode Reverse Recovery	-015M	---	10.8	---	µJ
		-046M	---	8.43	---	
		-056M	---	9.88	---	
E_{ON} @T_J=115 °C, V^+=300 V, I_D=0.5 A	Switching Energy, Turn On Condition	-015M	---	31.8	---	µJ
		-046M	---	49.7	---	
		-056M	---	59.7	---	
E_{OFF} @T_J=115 °C, V^+=300 V, I_D=0.5 A	Switching Energy, Turn Off Condition	-015M	---	1.96	---	µJ
		-046M	---	1.81	---	
		-056M	---	2.27	---	
		-015M	---	12.6	---	µJ

DC Characteristics

Symbol	Description		Min	Typ	Max	Units
E_{REC} @T_J=115 °C, V^+=300 V, I_D=0.5 A	Switching Energy, Diode Reverse Recovery	-046M	---	7.94	---	
		-056M	---	9.91	---	

Note: All values obtained during characterization, not tested at munfacturing.

4.5 MOSFET Avalanche Characteristics

Table 6 MOSFET Avalanche Characteristic

Symbol	Description		Min	Typ	Max	Units
EAS, V^+=100 V, I_D=1.7 A	Single Pulse Avalanche Energy	-015M	---	---	49	mJ
EAS, V^+=50 V, I_D=0.6 A		-046M	---	---	26	
EAS, V^+=50 V, I_D=1 A		-056M	---	---	50	

Note: All values obtained during characterization, not tested at munfacturing.

4.6 Thermal Characteristics

Table 7 Thermal Characteristics

Symbol	Description	Min	Typ	Max	Units
$R_{th(J\text{-}amb)}$	Total Thermal Resistance Junction to Ambient	---	27.7	---	°C/W

Note: All values obtained during characterization, not tested at munfacturing.

The previous value of $R_{th(J\text{-}amb)}$ has been obtained under the following testing condition: T_{amb}=25°C, $T_{hotspot}$=51.6°C and a dissipated power of 1W. A FR4 PCB with 2oz copper has been used and the PCB layout is shown in Figure 13.

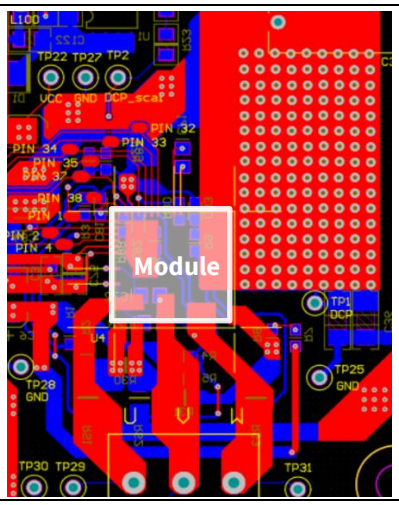

Figure 13 PCB layout used for thermal characterization: 2oz copper, 2 layers. DcBus Pad: 3,0 cm x 1,8 cm on both layers with 144 vias.

4.7 Thermal Characterization

Figure 14, 15, 16, 17, 18, 19 show the thermal characterizations of the three part numbers. The tests reported in Figure 14, 15, 16 have been performed under the following conditions: T_{amb}=25°C, different phase current values until the case reaches 105°C, two PWM frequencies (6 and 16kHz) and two different modulation types (3-phase modulation and 2-phase flat bottom modulation). The tests reported in Figure 17, 18, 19 have been performed under the following conditions: T_{amb}=60°C, different phase current values until the case reaches 105°C, two PWM frequencies (6 and 16kHz) and two different modulation type (3-phase modulation and 2-phase flat bottom modulation). 2-ph flat bottom modulation allows the reduction of the switching losses compared with 3-phase SVPWM (symmetrical placement of zero vectors). For the test with T_{amb}=60°C, the 3-phase modulation has not been used. For all the tests, the phase current has been limited to 600 mArms in order to avoid damage to the motor used for the tests. A FR4 PCB with 2oz copper has been used and the PCB layout is shown in Figure 13.

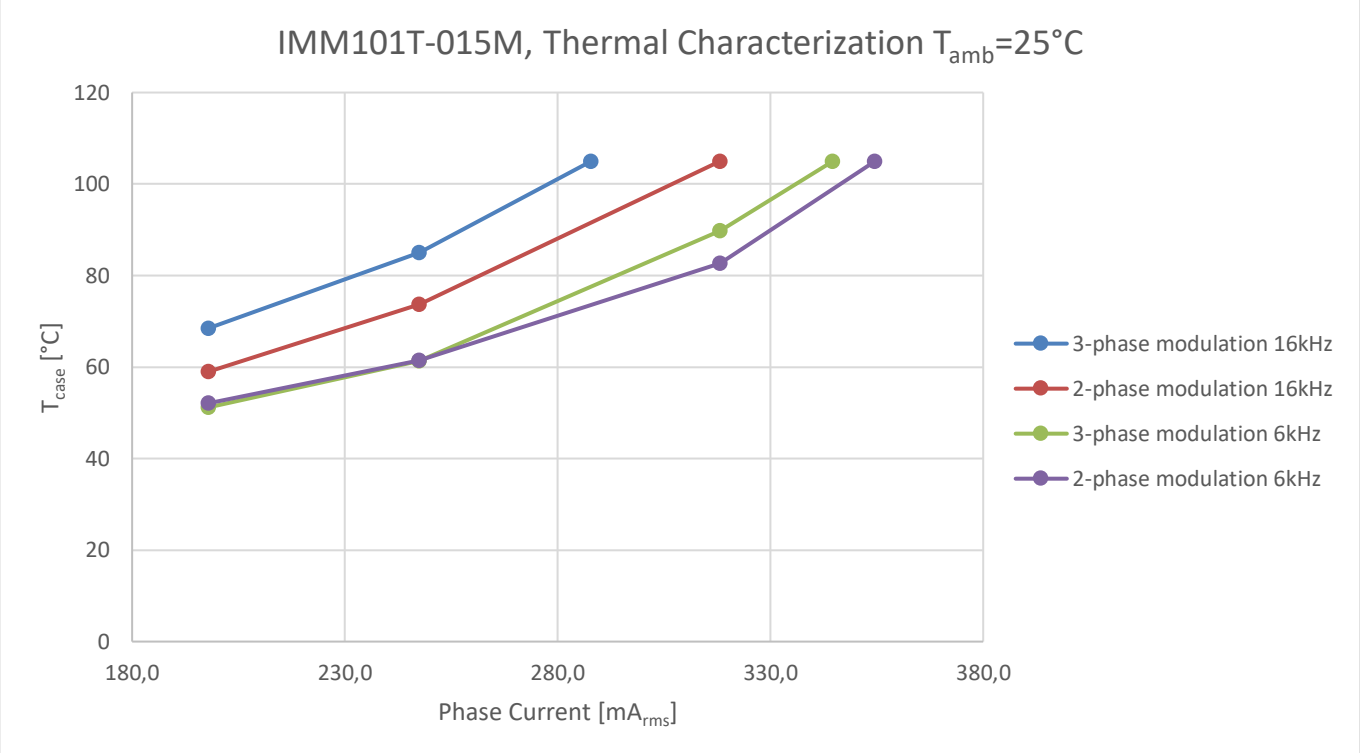

Figure 14 IMM101T-015M Thermal Characterization, T_{amb}=25°C, different phase current values until the case reaches 105°C, FR4 PCB with 2oz copper

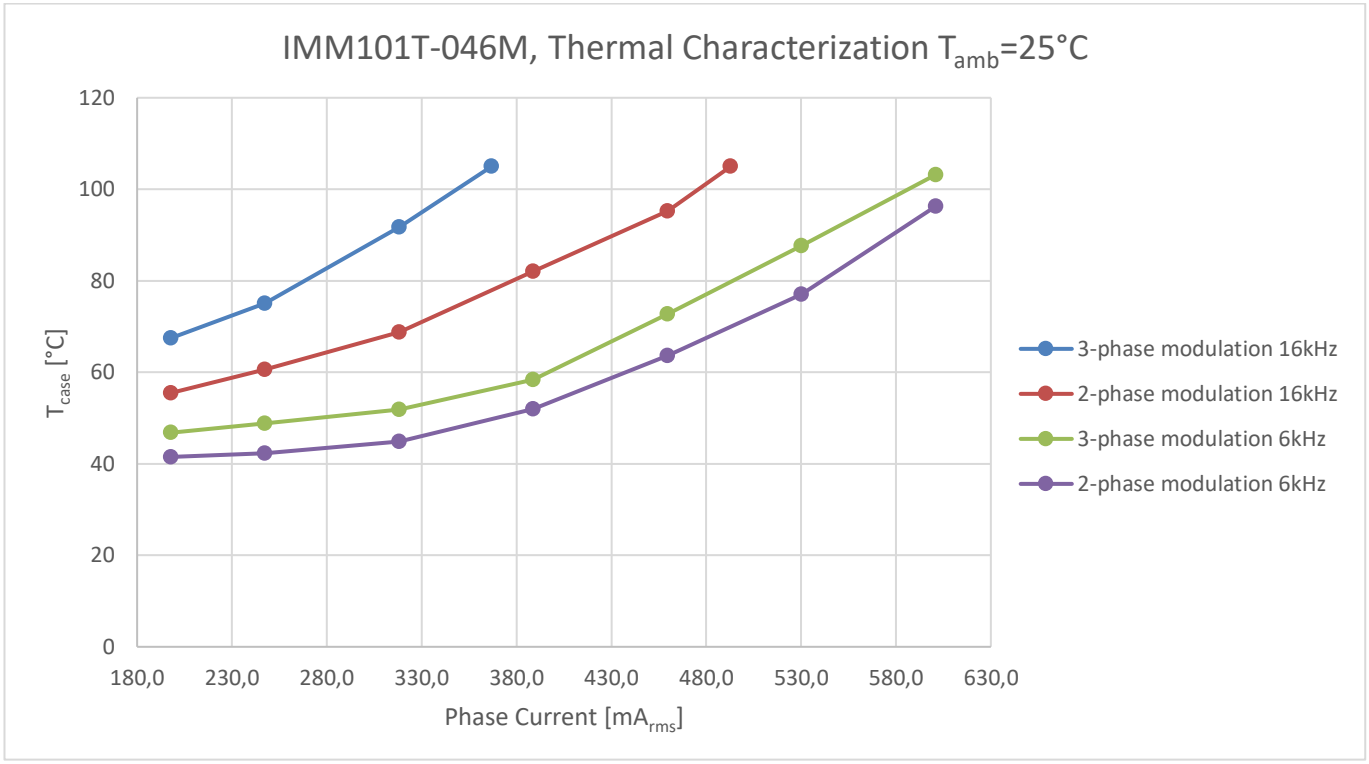

Figure 15 IMM101T-046M Thermal Characterization, T_{amb}=25°C, different phase current values until the case reaches 105°C, FR4 PCB with 2oz copper

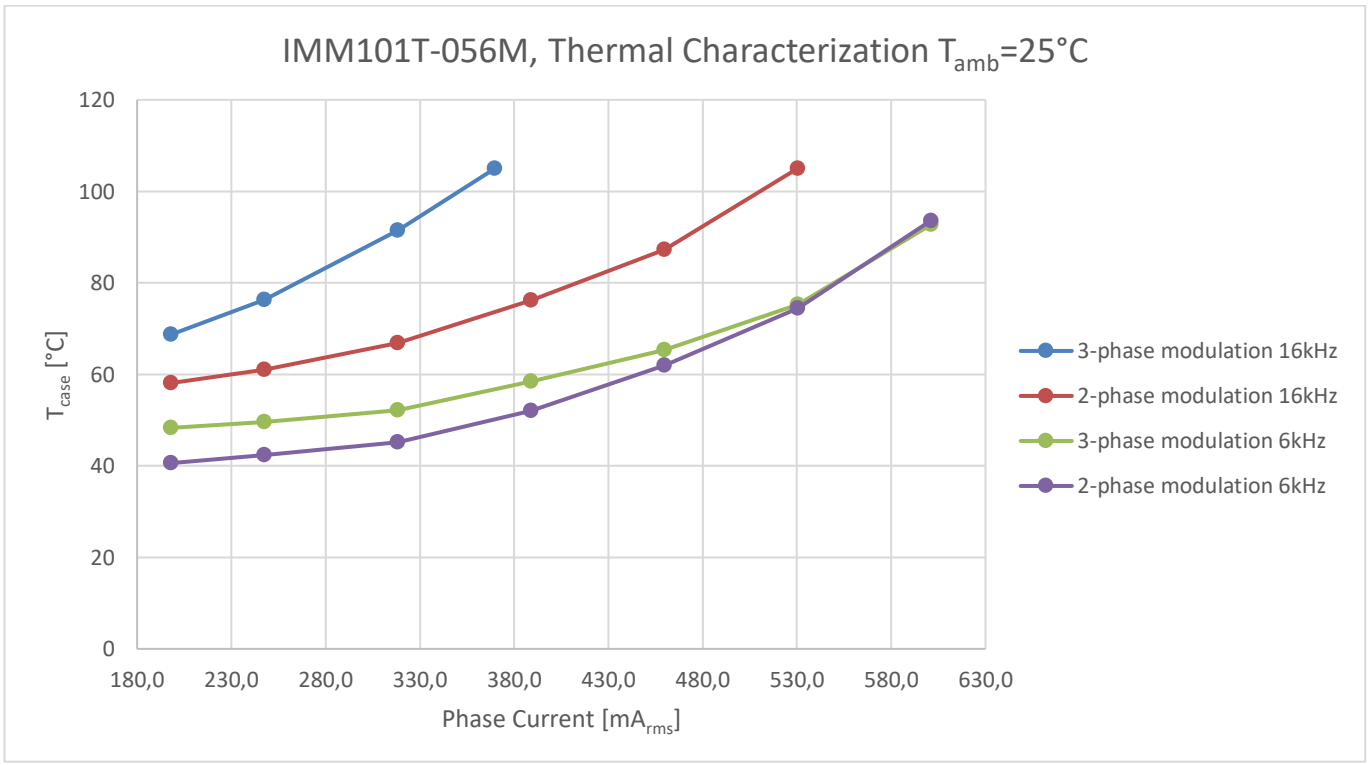

Figure 16 IMM101T-056M Thermal Characterization, T_{amb}=25°C, different phase current values until the case reaches 105°C, FR4 PCB with 2oz copper

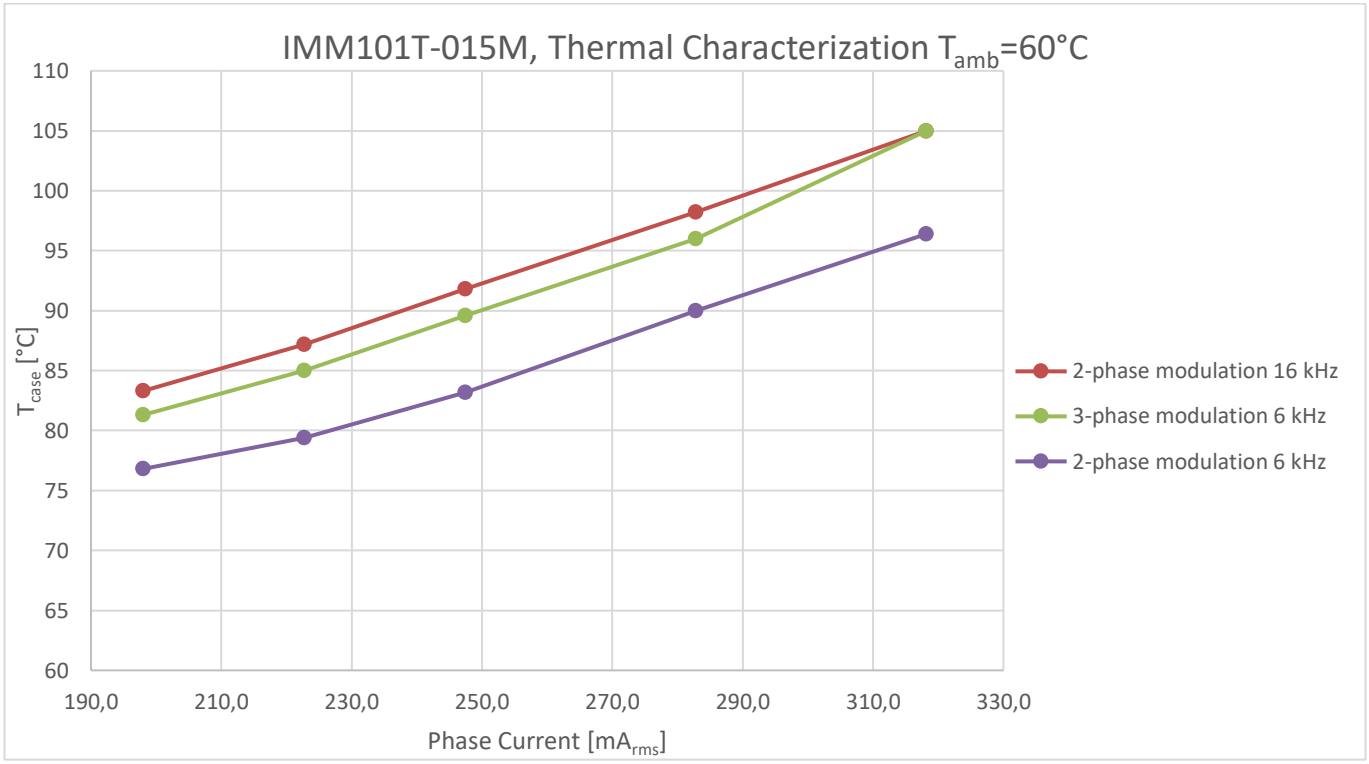

Figure 17 IMM101T-015M Thermal Characterization, T_{amb}=60°C, different phase current values until the case reaches 105°C, FR4 PCB with 2oz copper

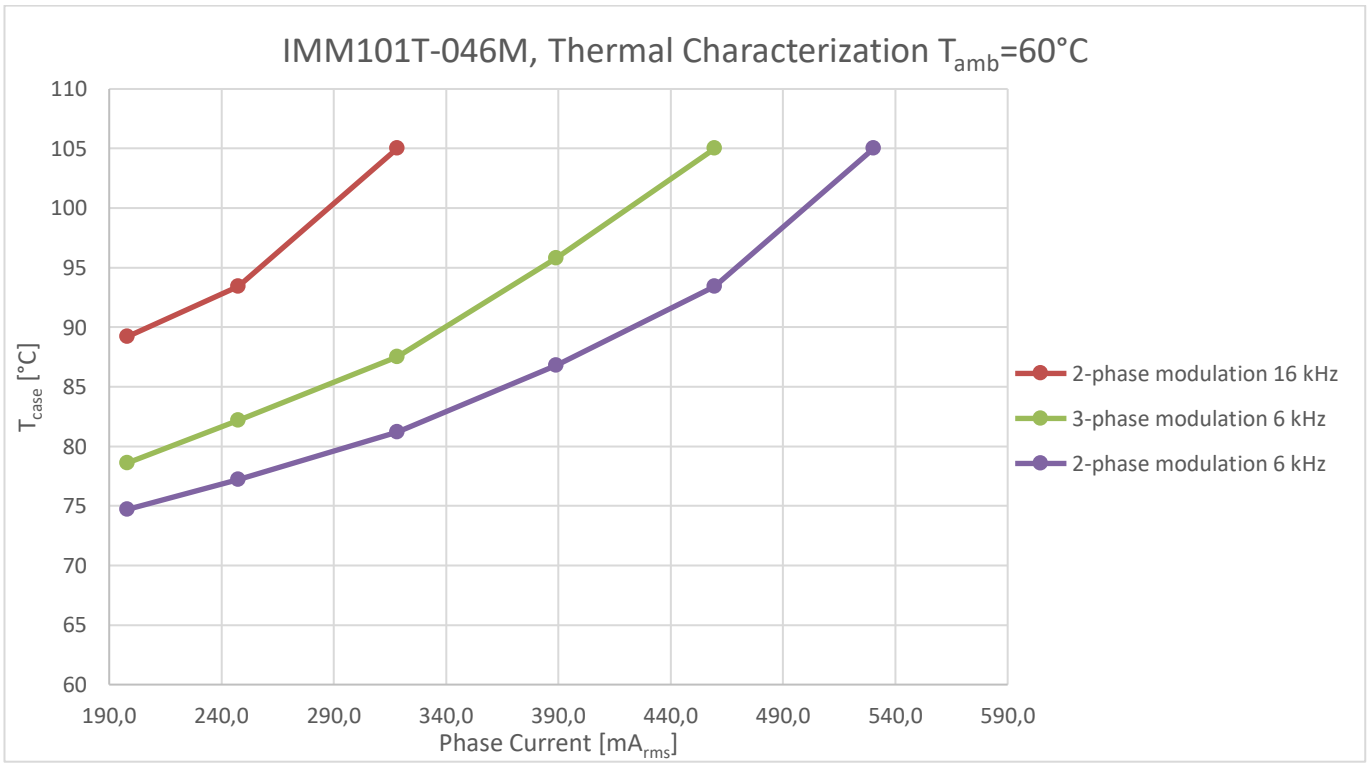

Figure 18 IMM101T-046M Thermal Characterization, T_{amb}=60°C, different phase current values until the case reaches 105°C, FR4 PCB with 2oz copper

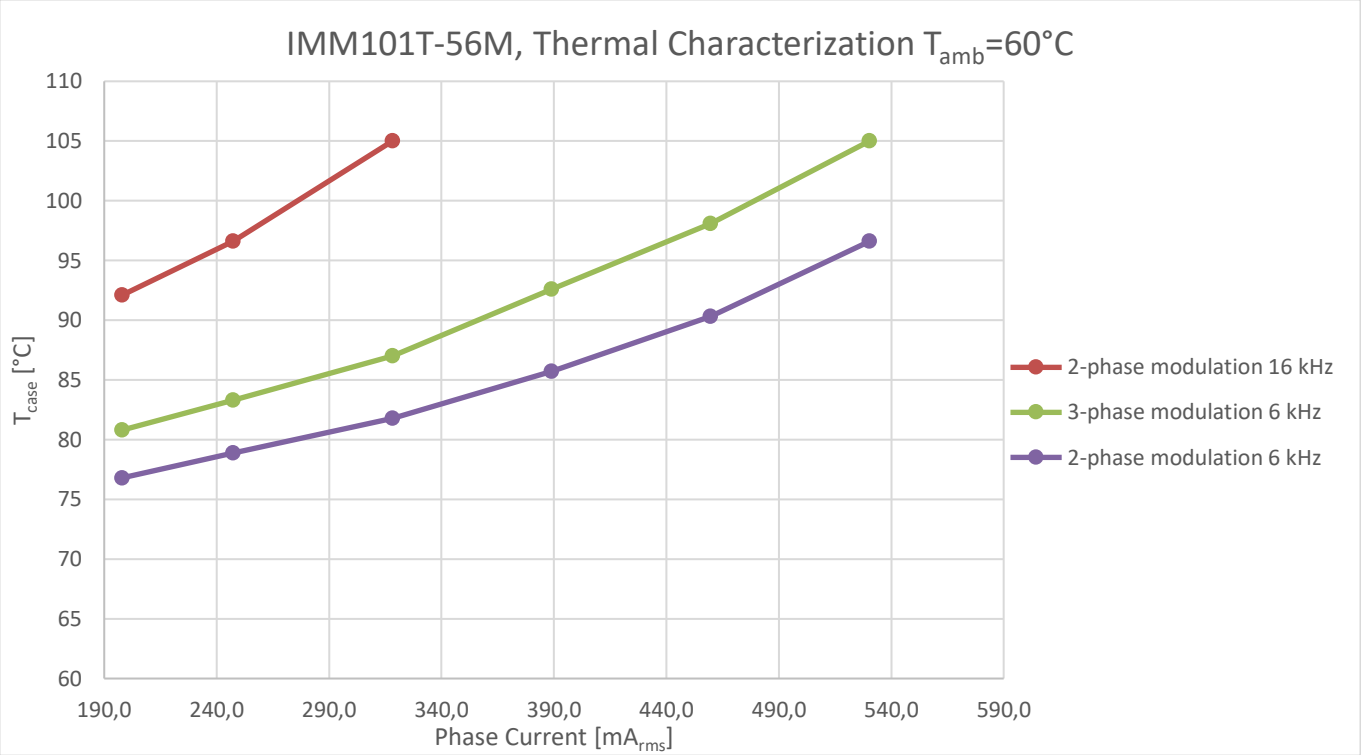

Figure 19 IMM101T-056M Thermal Characterization, T_{amb}=60°C, different phase current values until the case reaches 105°C, FR4 PCB with 2oz copper

Note: Characterized, not tested at manufacturing.

4.8 Power Consumption IMM100T series

V_{CC}=15V, V_{DD}=5V, V_{BUS} = 300V, Ta = 25 ˚C, unless specified otherwise.

Note: These parameters are not subject to production test, but verified by design and/or characterization.

Table 8 Power Consumption – IMM100T series

Symbol	Parameter	Min	Typ	Max	Unit	Condition
P_{MOTOR}	Power Consumption – motor active and PFC not active	---	50	100	mW	
$P_{MOTOR+PFC}$	Power Consumption – motor and PFC active	---	70	100	mW	IMM102T only
I_{DDPDS}	Deep Sleep mode controller current	---	0.27	---	mA	
t_{SSA}	Controller Wake-up time from Sleep to Active mode	----	6	---	Clock cycles	
t_{DSA}	Controller Wake-up time from Deep Sleep to Active mode	---	290	---	µs	

4.9 Flash Memory Parameters

Note: These parameters are not subject to production test, but verified by design and/or characterization.

Table 9

Symbol	Parameter	Min	Typ	Max	Unit	Condition
t_{RET}	Data Retention Time	10	---	---	years	Max. 100 erase / program cycle
N_{ECYC}	Erase Cycles	---	---	5×10^4	cycles	Sum of pages and sector erase cycles
N_{TECYC}	Total Erase Cycles	---	---	2×10^6	cycles	

4.10 Digital I/O DC Characteristics

V_{DD}=3.3V, Ta = 25˚C, all voltage parameters are referenced to V_{SS} unless specified otherwise.

Note: These parameters are not subject to production test, but verified by design and/or characterization.

Table 10 Digital I/O Charasteristics

Symbol	Parameter	Min	Typ	Max	Unit	Condition
V_{ILPS}	Input Low-Voltage on port pins with std Hysteresis	---	---	0.19 x V_{DD}	V	
V_{IHPS}	Input High-Voltage on port pins with std Hysteresis	0.7 x V_{DD}	---	---	V	
V_{ILPL}	Input Low-Voltage on port pins with large Hysteresis	---	---	0.08 x V_{DD}	V	
V_{IHPL}	Input High-Voltage on port pins with Large Hysteresis	0.85 x V_{DD}	---	---	V	
V_{OLP}	Output Low-Voltage on port pins (with standard pads)	---	---	0.4	V	I_{OL} = 3.5 mA
V_{OLP1}	Output Low-Voltage on high-current pads	---	---	0.32	V	I_{OL} = 10 mA
V_{OHP}	Output High-Voltage on port pins (with standard pads)	V_{DD}-0.4	---	---	V	I_{OH} = -2.5 mA
V_{OHP1}	Output High-Voltage on high-current pads	V_{DD} – 0.32	---	---	V	I_{OH} = -6 mA
I_L	Input leakage current	-1	---	+1	µA	V_O = 3.3V or 0V
I_{OL}	Low-Level output current	---	---	5	mA	V_O = 0.4V
I_{OH}	High-Level output current	---	---	-7	mA	V_O = 2.4V
t_{HCPR} t_{HCPF}	Rise/fall time on High-Current Pad	---	---	12	ns	50 pF

DC Characteristics

Symbol	Parameter	Min	Typ	Max	Unit	Condition
t_R t_F	Rise/fall time on std Pad	---	---	15	ns	50 pF
C_{IO}	Pin capacitance (digital inputs/outputs)	---	---	10	pF	
I_{PUP}	Pull-up current on port pins	---	---	-50	µA	V_{IH},min
	Pull-up current on port pins	-65	---	---	µA	V_{IL},max
I_{PDP}	Pull-down current on port pins	---	---	30	µA	V_{IL},max
	Pull-down current on port pins	60	---	---	µA	V_{IH},min
V_{PO}	Voltage on any pin during V_{DD} power off	---	---	0.3	V	

4.11 Analog I/O DC Characteristics

V_{DD}=3.3V, Ta = 25˚C, all voltage parameters are referenced to V_{SS} unless specified otherwise.

Note: These parameters are not subject to production test, but verified by design and/or characterization.

Table 11 Analog I/O Charasteristics

Symbol	Parameter	Min	Typ	Max	Unit	Condition
C_{IN}	Switched capacitance of analog inputs	---	1.2	2	pF	Gain 1, 3
		---	4.5	6	pF	Gain 6, 12
ADC_{GAIN}	ADC Configurable Gain	---	1 – 3 – 6 – 12	---		
C_{AINT}	Total capacitance of an analog input	---	---	10	pF	
C_{AREFT}	Total capacitance of reference input	---	---	10	pF	

4.12 Under Voltage Lockout DC characteristics

Ta = 25˚C, all voltage parameters are referenced to V_{SS} unless specified otherwise.

Note: These parameters are not subject to production test, but verified by design and/or characterization.

Table 12 Undervoltage Lockout DC Charasteristics

Symbol	Parameter	Min	Typ	Max	Unit	Condition
V_{DDPBO}	V_{DD} Brownout reset voltage	1.55	1.62	1.75	V	
V_{DDPA}	V_{DD} voltage to ensure defined pad states	---	1.0	---	V	
t_{SSW}	Start-up time from power-on reset	---	260	---	µs	
t_{BMI}	BMI program time	---	8.25	---	ms	
V_{CCUV+} V_{BSUV+}	V_{CC} and V_{BS} supply undervoltage positive going threshold - gate driver	8.0	8.9	9.8	V	
V_{CCUV-} V_{BSUV-}	V_{CC} and V_{BS} supply undervoltage negative going threshold - gate driver	7.4	8.2	9.0	V	

V_{CCUVH} V_{BSUVH}	V_{CC} and V_{BS} supply under voltage hysteresis – gate driver	---	0.7	---	V	

4.13 Analog to Digital Converter – IMM100T series

The following table shows the Analog to Digital Converter (ADC) characteristics. This specification applies to all analog input as given in the pin configuration list.

Note: These parameters are not subject to production test, but verified by design and/or characterization.

Table 13 ADC Characteristics – IMM100T series

Symbol	Parameter	Min	Typ	Max	Unit	Condition
V_{AIN}	Analog input voltage range	Vss – 0.05	---	V_{DD} + 0.05	V	
t_{sample}	Sample Time	---	200	---	ns	
EN_{RMS}	RMS noise	---	1.5	---	LSB 12	
EA_{DNL}	DNL error	---	+/- 2.0	---	LSB 12	
EA_{INL}	INL error	---	+/- 4.0	---	LSB 12	
EA_{GAIN}	Gain error with external reference	---	+/- 0.5	---	%	
EA_{OFF}	Offset error	---	+/- 8.0	---	mV	

4.14 Temperature Sensor Characteristic

IMM101T and IMM102T have an internal temperature sensor that is used by MCE to linearly derate the power consumption and protect the power section. The linear power derating function with temperature shutdown is defined by parameters programmed by the user.
The power dissipation must be limited so that the average controller junction temperature does not exceed 115 °C.

Note: Temperature sensor characteristic is not subject to production test, but verified by design and/or characterization.

Table 14 Temperature Sensor Characteristics

Symbol	Parameter	Min	Typ	Max	Unit	Condition
t_M	Measurement time[2)]	---	---	10	ms	
T_{SR}	Temperature sensor range	-40	---	115	°C	
T_{TSAL}	Sensor Accuracy[1)]	-6	---	6	°C	$T_J > 20°C$
		-10	---	10	°C	$0°C \le T_J \le 20°C$
		---	+/-8	---	°C	$T_J < 0°C$

1) The temperature sensor accuracy is independent of the supply voltage.

2) The temperature of the different parts of the IMM100 is strongly impacted by the thermal design of the application and may be different from the temperature sensor reading. It is the designers' responsibility to always ensure that the maximum ratings given in this datasheet are never exceeded.

5 AC Characteristics

5.1 Internal Oscillator AC Characteristics

V_{DD}=3.3V, Ta = 25˚C unless specified otherwise.

Note: These parameters are not subject to production test, but verified by design and/or characterization.

Table 15 96MHz DCO1 Oscillator characteristics

Symbol	Parameter	Min	Typ	Max	Unit	Condition
$DCO1f_{NOM}$	Nominal Frequency and Accuracy	---	96	---	MHz	Ta = 25˚C
		-1.7	---	3.4	%	0˚C < Ta < 85˚C
		-3.9	---	4.0	%	-40˚C < Ta < 105˚C

5.2 Power-Up and Supply Threshold Characteristics

The guard band between the lowest valid operating voltage and the brownout reset threshold provides a margin for noise immunity and hysteresis. The electrical parameters may be violated while V_{DD} is outside its operating range. The brownout detection triggers a reset within the defined range. The prewarning detection can be used to trigger an early warning and issue corrective and/or fail-safe actions in case of a critical supply voltage drop.

Note: These parameters are not subject to production test, but verified by design and/or characterization.

Note: Operating Conditions apply.

V_{DD}=3.3V, Ta = 25˚C unless specified otherwise. C=100nF between V_{DD} and V_{SS}.

Table 16 Power-Up and Supply

Symbol	Parameter	Min	Typ	Max	Unit	Condition
t_{RAMPUP}	V_{DD} ramp-up time	---	---	10^7	µs	
S_{VDDPOP}	V_{DD} slew rate	---	---	0.1	V/µs	Slope during normal operation
S_{VDDP10}		---	---	10	V/µs	Slope during fast transient within +/-10% of V_{DD}
$S_{VDDPrise}$		---	---	10	V/µs	Slope during power-on or restart after brownout event
$S_{VDDPfail}$		---	---	0.25	V/µs	Slope during supply falling out of the +/-10% limits

5.3 Motor Control Parameters – IMM100T series

Motion Control parameters that are defined in the iMOTION™ motion control engine (MCE) software are defined and explained in iMOTION™ reference Manual.

5.3.1 PWM Characteristics – IMM100T series

Table 17 PWM timing in IMM100T

Symbol	Parameter	Min	Typ	Max	Unit	Condition
f_{PWM}	PWM frequency	5	16	26	kHz	

5.3.2 Fault timing – IMM100T series

Table 18 Fault timing in IMM100T

Symbol	Parameter	Min	Typ	Max	Unit	Condition
$t_{FLTwidth}$	Minimum pulse width of fault event to be acknowledged at input over current comparators	1.0	---	---	µs	
t_{TRAP}	reaction time to acknowledged overcurrent at input comparators – Fault to PWM disable propoagation time	---	1.3	---	µs	

5.4 Power Factor Correction (PFC) parameters – IMM102T

The PFC parameters only refer to the IMM102T with integrated PFC control algorithm and are defined and explained in iMOTION™ reference Manual.

5.4.1 Boost PFC characteristics – IMM102T

Table 19 PFC PWM timing in IMM102T

Symbol	Parameter	Min	Typ	Max	Unit	Condition
f_{PFCPWM}	PFC PWM frequency	---	20	70	kHz	

5.5 Communication interface parameters – IMM100T series

The IMM100T series provides the following communication interfaces.

Note: These parameters are not subject to production test, but verified by design and/or characterization.

5.5.1 UART interface - IMM100T series

The UART interface is configured as given below.

Note: Operating Conditions apply.

Note: Each bit including start and stop bit is sampled three times at center of a bit at an interval of 1/16 T_{BAUD}.

Table 20 UART timing in IMM100T - series

AC Characteristics

Symbol	Parameter	Min	Typ	Max	Unit	Condition
f_{UART}	UART baud rate	1200	57600	---	bps	
	UART mode	---	8-N-1	---		data-parity-stop bit
$t_{UARTFIL}$	UART sampling filter period	---	1/16	---	T_{BAUD} =1/f_{UART}	

6 I/O Structure

The following figure shows the I/O structure for all digital I/O pins.

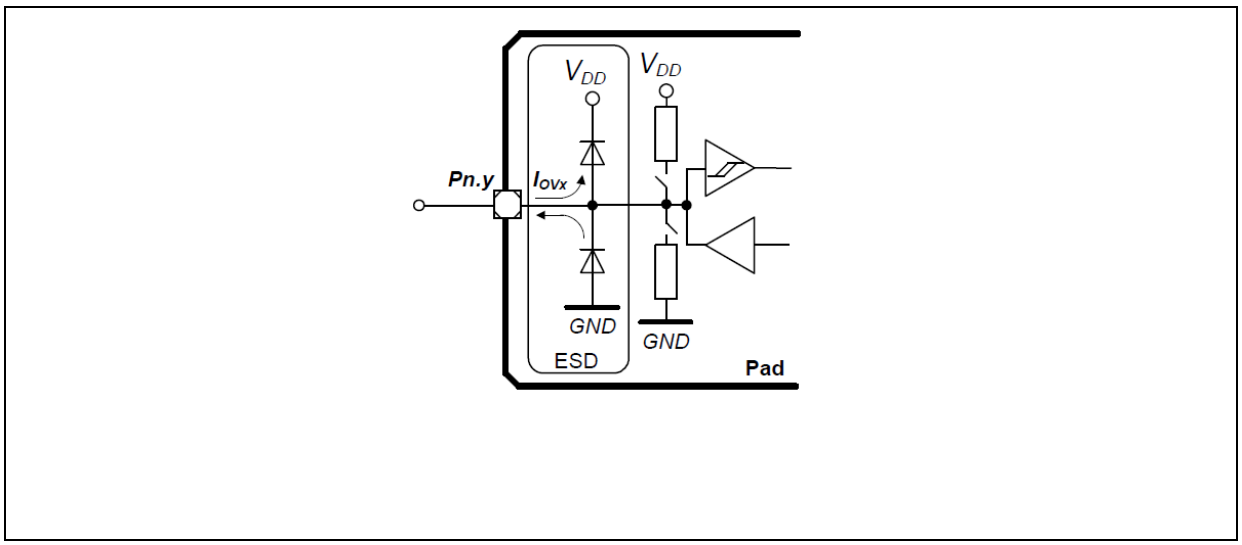

Figure 20 Digital I/O Structure

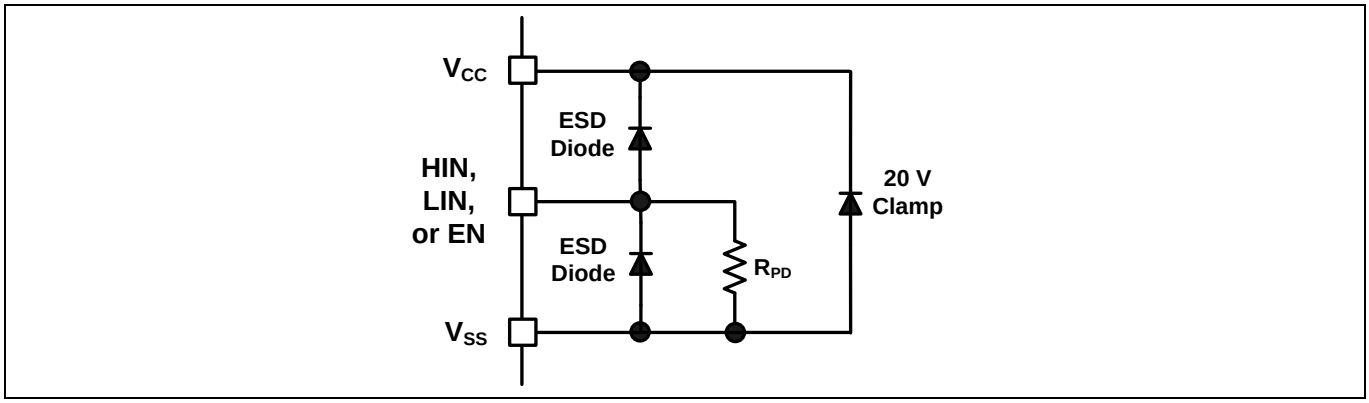

Figure 21 VCC pin I/O gate driver structure

7 Package Outline

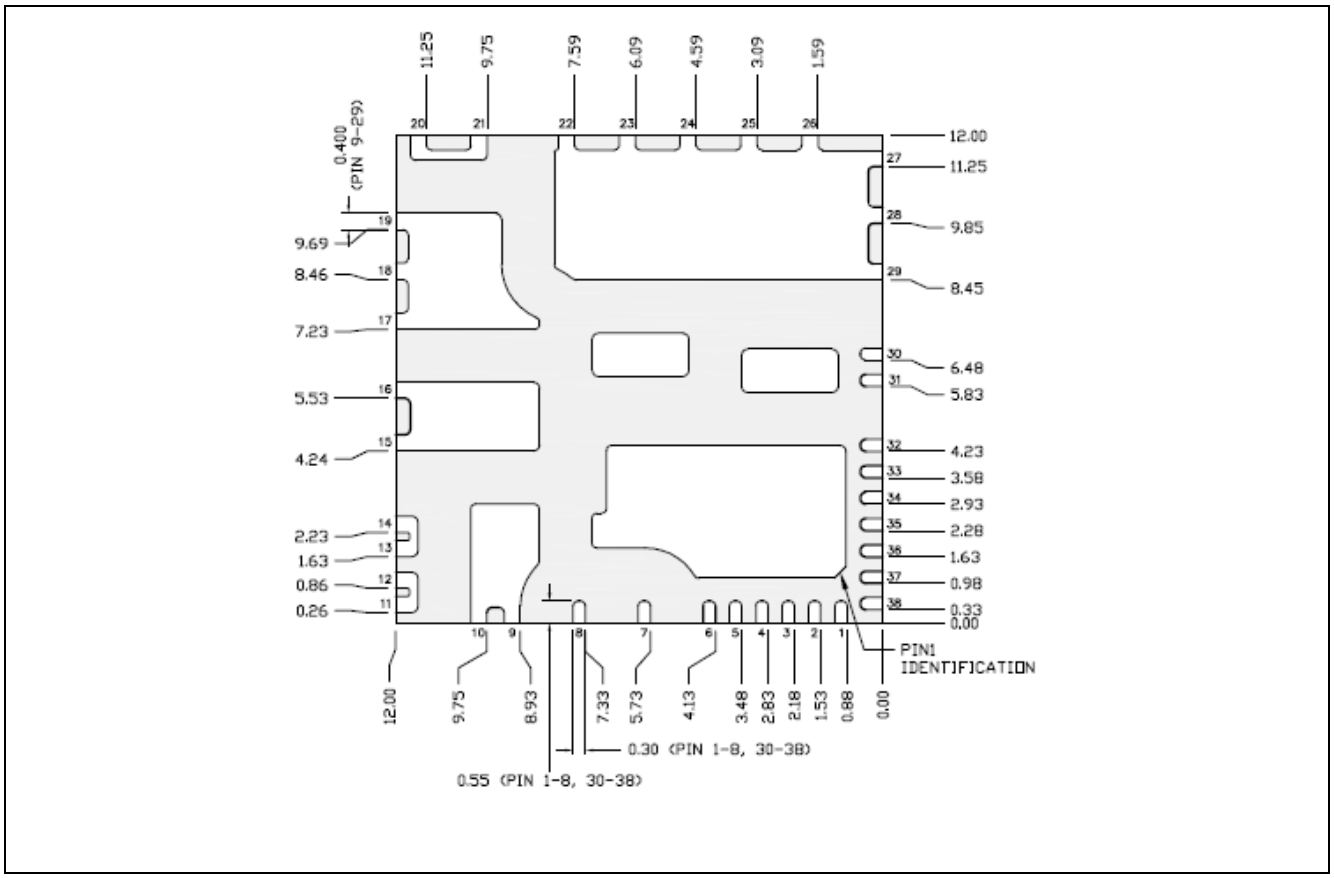

Figure 22 Bottom View, Dimensions in mm

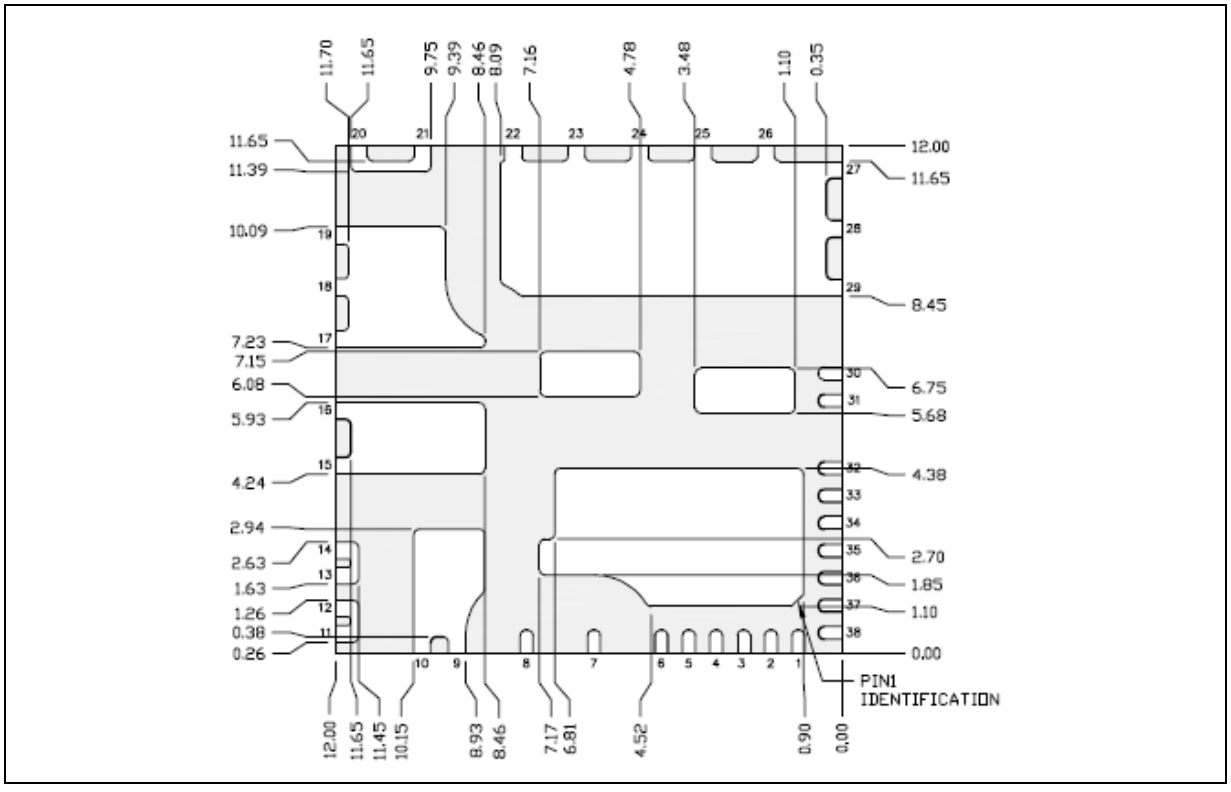

Figure 23 Bottom View, Dimensions in mm

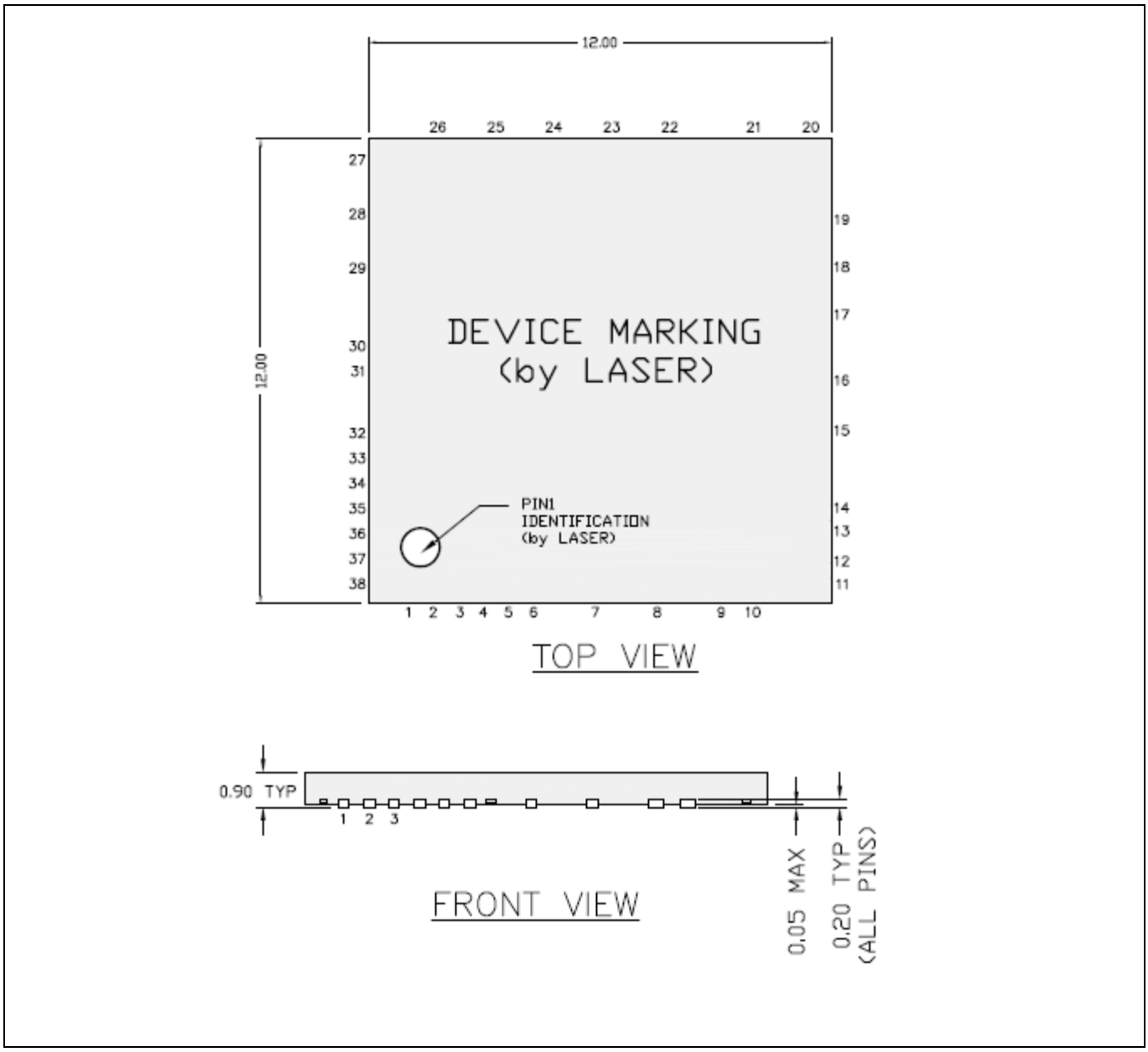

Figure 24 Top View and Dimensions

8 Part Marking Information

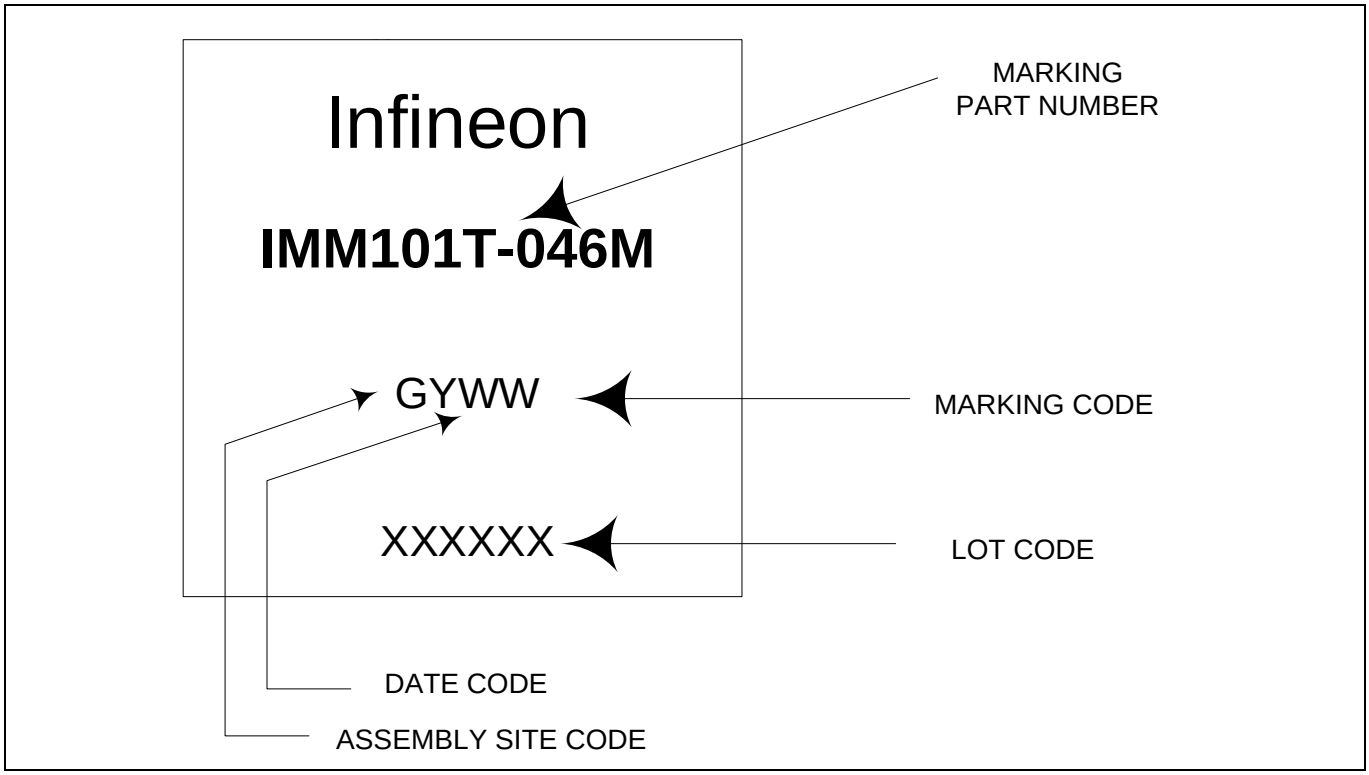

Figure 25 Part Marking

9 Quality Declaration

Table 21 Quality Parameters

Qualification Level		Qualified for industrial applications according to the relevant tests of JEDEC47/20/22
Moisture Sensitivity Level		MSL3 (per IPC/JEDEC J-STD-020C)
ESD	**Charged Device Model**	Class C2B (per ANSI/ESDA/JEDEC standard JS -002)
	Human Body Model	Class C2 (per EIA/JEDEC standard EIA/JESD22-A114-F)
RoHS Compliant		Yes

Note: Test condition for Temperature Cycling test is -40C to 125C.

Revision history

Document Version	Date of Release	Description of changes
v01_00	2019-04-10	Initial version
v01_01	2019-06-05	Typo Corrections

Trademarks
All referenced product or service names and trademarks are the property of their respective owners.

Edition 2019-06-05

Published by Infineon Technologies AG
81726 Munich, Germany

© 2019 Infineon Technologies AG All Rights Reserved.

Do you have a question about any aspect of this document?

Email: erratum@infineon.com

Document reference

IFX-vqf1553180223116

IMPORTANT NOTICE

The information given in this document shall in no event be regarded as a guarantee of conditions or characteristics ("Beschaffenheitsgarantie").

With respect to any examples, hints or any typical values stated herein and/or any information regarding the application of the product, Infineon Technologies hereby disclaims any and all warranties and liabilities of any kind, including without limitation warranties of non-infringement of intellectual property rights of any third party.

In addition, any information given in this document is subject to customer's compliance with its obligations stated in this document and any applicable legal requirements, norms and standards concerning customer's products and any use of the product of Infineon Technologies in customer's applications.

The data contained in this document is exclusively intended for technically trained staff. It is the responsibility of customer's technical departments to evaluate the suitability of the product for the intended application and the completeness of the product information given in this document with respect to such application.

WARNINGS

Due to technical requirements products may contain dangerous substances. For information on the types in question please contact your nearest Infineon Technologies office.

Except as otherwise explicitly approved by Infineon Technologies in a written document signed by authorized representatives of Infineon Technologies, Infineon Technologies' products may not be used in any applications where a failure of the product or any consequences of the use thereof can reasonably be expected to result in personal injury